# 500W STADIUMPRO III RD | LED SPORT LIGHT

## PRODUCT DESCRIPTION

The StadiumPro Series reaches new heights with the Series III! It boasts enhanced efficiency, delivering an impressive 140+ Lumens per watt. Equipped with top-ofthe-line uPowerTek Driver, it offers versatile mounting options and advanced optics.



PART #: RGL-STADIUMPRO-3-500W-RD

## PRODUCT FEATURES & COMMON USE APPLICATIONS

- ✓ UL cUL
- ✓ Input voltage 120-277Vac
- ✓ No UV or IR in the beam
- ✓ Easy to install and operate
- ✓ Energy saving, long lifespan
- ✓ Instant start, NO flickering, NO humming
- ✓ Green and eco-friendly without mercury
- ✓ Output constant current lever can be adjusted through output cable with 0-10V.

- ✓ Stadium Fields
- ✓ Gymnasium
- ✓ Square plaza
- ✓ Shipyard, Airport, wharf
- ✓ High mast and Contour lighting, etc.

## PRODUCT DIMENSIONS

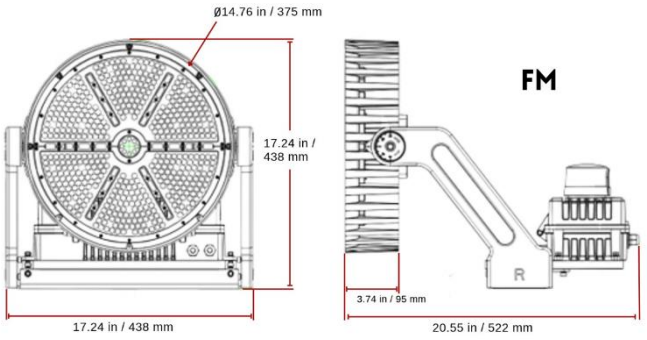


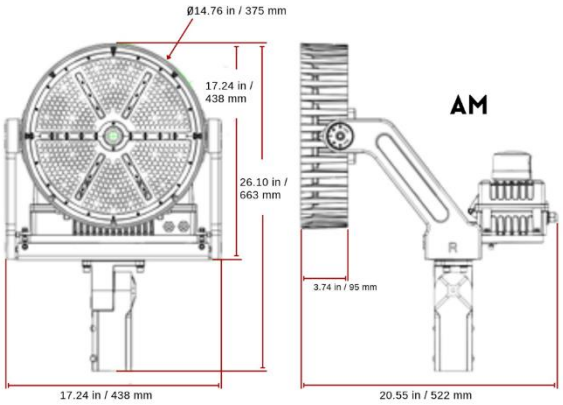





Rugged Grade Lighting
Industrial Grade Solutions

888-953-2476
sales@ruggedgrade.com

# 500W STADIUMPRO III RD | LED SPORT LIGHT

RuggedGrade

## PRODUCT TECHNICAL SPECIFICATIONS

| | | |
|---|---|---|
| **OPTICAL** | Input Power (Tolerance: ±10%) | 500W |
| | Color Temperature | 5000K |
| | Lumen (Tolerance: -10%) | 71,500 LM |
| | Efficacy (Tolerance: -3%) | 143 LM/W |
| | CRI | >70 |
| | Color Consistency | ＜6 Steps (or ＜6 SDCM) |
| | BUG | B5-U0-G5 |
| | Distribution Pattern | NEMA:4 |
| | Beam Angle (50%) (Tolerance: ±15%) | 30° |
| **ELECTRICAL** | Input Voltage and Frequency | 120-277VAC, 50/60Hz |
| | PF (Tolerance: -3%) | ≥0.9 |
| | THD (Tolerance: +5%) | ≤20% |
| | Flicker Percent | <5% |
| | Driver Brand | uPowerTek |
| | Driver Model | BLD-240-C210-ENU*2PCS |
| | Driver Surge protection | L/N-PE: 10kV, L-N:6kV |
| | Dimming | 0-10V dimming standard |
| | Optional Accessory | Sensor Receptacle+Photosensor /Sensor Receptacle+Short Cap |
| **MATERIALS** | LED Brand | Bridgelux |
| | LED Type | SMD3030 |
| | LED QTY | 504 PCS |
| | Housing | Die-cast aluminum |
| | Housing Color | Black, Bronze, or Customized |
| | EPA | 1.9 ft² |
| | Waterproof Rating | WET（IP65） |
| | Operating Temperature | -40℃ TO 45℃ |
| **OTHERS** | Storage Temperature | -40℃ TO 80℃ |
| | Operating Humidity | 20% - 90% RH |
| | Storage Humidity | 10% - 95% RH |
| | Warranty | 5 years warranty with 24/7 operating hours Luminaire lifetime at 25℃. |

# 500W STADIUMPRO III RD | LED SPORT LIGHT

## PRODUCT IMAGES & ACTUAL INSTALLATIONS




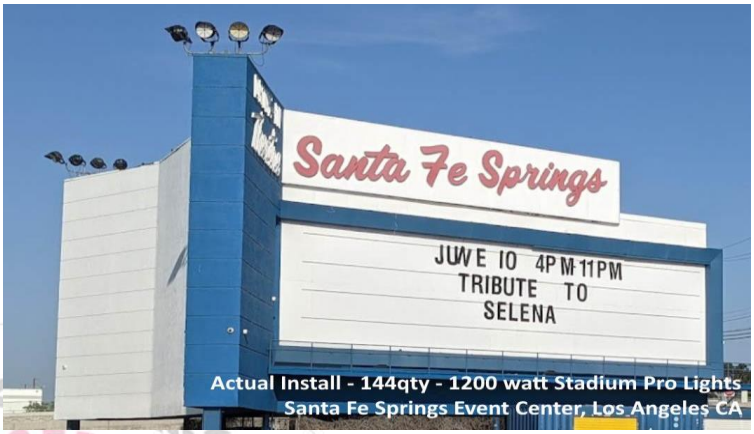





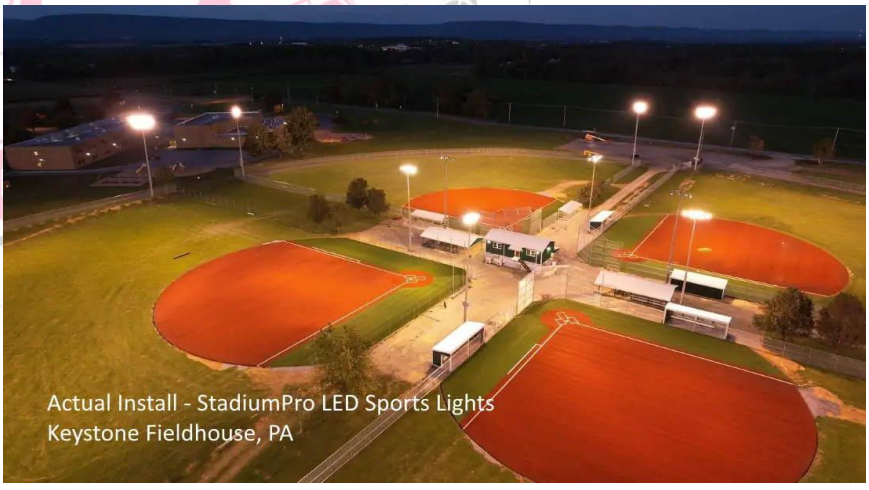


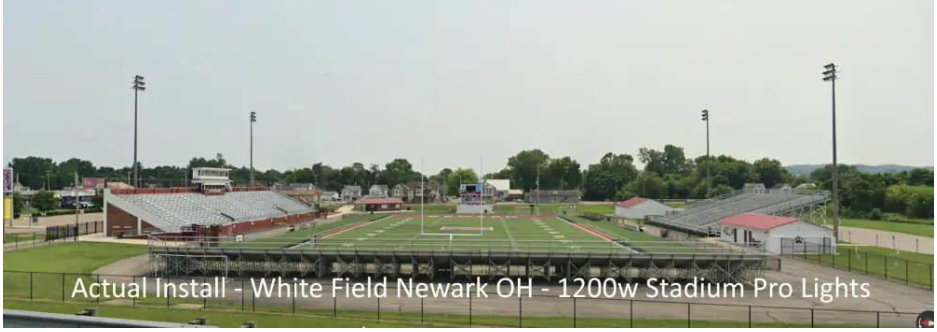

PHOTOMETRICS

## LIGHT DISTRIBUTION TESTING PARAMETERS < 30° >

## Luminaire Property

Luminaire Manufacturer:
Luminaire Category:
Lamp Catalog:
Number of Lamps:
Luminous Length (mm):
Luminous Height (mm):
Current: 4.209 A
Power Factor: 0.995

Luminaire Description:
Lamp Description:
Lumens per Lamp:
Luminous Width (mm):
Voltage: 120.0 V
Power: 502.59 W

## Photometric Results

IES Classification: Type I
Total Rated Lamp Lumens: 70417.7 lm
Efficiency: 100%
Upward Ratio: 0%
C0r0 Intensity: 189073.75 cd
Pos of Max. Intensity: H0 V1

Longitudinal Classification: Very Short
Measurement Flux: 70417.7 lm
Downward Ratio: 100%
Luminaire Efficacy Rating (LER): 140.16
Max. Intensity: 189244.8 cd

Beam Angle(C0/C180,C90/C270,C45/C225,C135/315): 29.9, 29.5, 30.4, 28.9

Luminous Intensity Distribution Curve

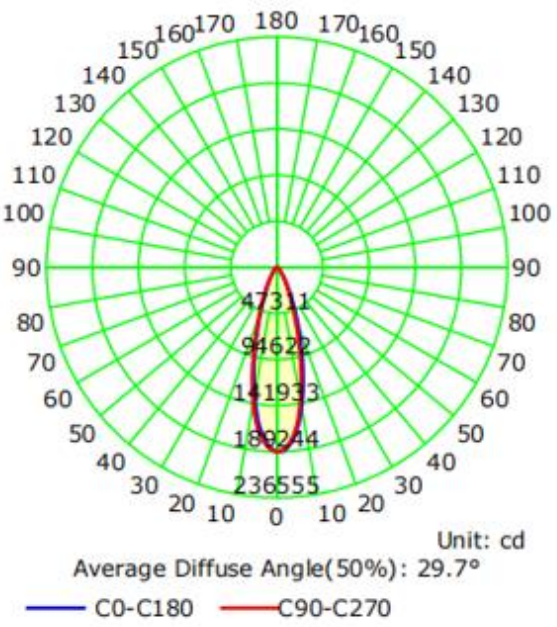


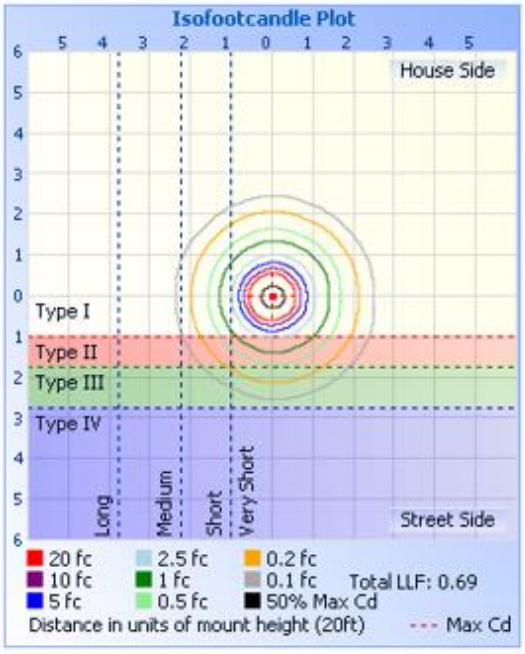

# 500W STADIUMPRO III RD | LED SPORT LIGHT

RuggedGrade

## DLC PRODUCT INFO

DLC QPL / Products / Product Details

Model Number

**RGL-STADIUMPRO-3-500WS1PS2A1-ac[10SP;20SP;Blank][AM;FM]57**

DLC LISTED PREMIUM

Manufacturer

RuggedGrade

Brand

RuggedGrade

SSL V5.1 Premium  Product ID: PLGKBHPDAJTF

### Product Overview 19 fields

| | |
|---|---|
| CATEGORY<br>Outdoor Luminaires | GENERAL APPLICATION<br>Very High Output |
| PRIMARY USE<br>Architectural Flood and Spot Luminaires | CLASSIFICATION<br>Premium |
| TECHNICAL REQUIREMENTS VERSION<br>5.1 | DLC FAMILY CODE<br>EMWAEW |
| BRAND<br>RuggedGrade | |
| PARENT<br>No | LISTING STATUS<br>Listed |
| DATE QUALIFIED<br>2021-08-06 | |
| REPORTED INPUT WATTAGE<br>507.5 W | REPORTED LIGHT OUTPUT<br>67,742 lm |
| REPORTED CCT<br>5700 K | REPORTED CRI<br>70 |
| REPORTED R9<br>-31 | REPORTED IES RF<br>74 |
| REPORTED IES RG<br>95 | REPORTED IES RCS,H1<br>-18 |
| INPUT POWER TYPE<br>AC | |

## PRODUCT PACKAGING

### PACKAGE

**Lamp Net Weight: 14.9KG / PC**

| | Size | Qty / Carton | Gross Weight / Carton |
|---|---|---|---|
| Outer box | 550*510*510 mm | 1 PC | 18.6 KG |

Tolerance of Carton Size: ±15 MM, Tolerance of Weight: ±10%.

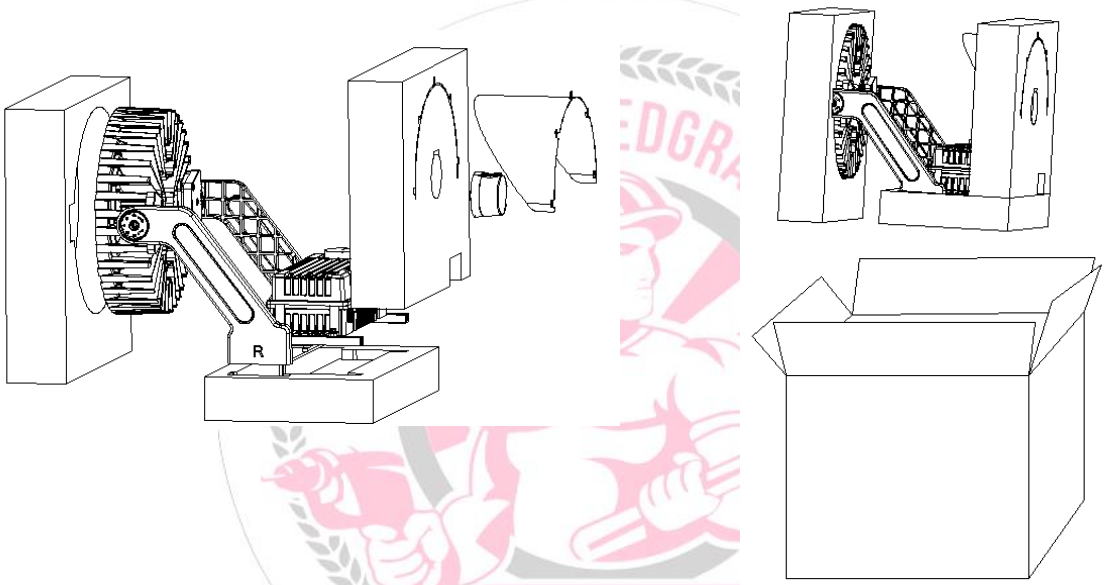


LEGENDARY USA SUPPORT

# 500W STADIUMPRO III RD | LED SPORT LIGHT

## PRODUCT WARNINGS

- Please turn off power before install or change assembly parts.
- The input voltage and lamps should be matched, after connecting the power line.
- Please make sure the wiring section is insulated.
- Professionals must install and disassemble the lamps.
- Surge is the number 1 cause of LED light failure. Outdoor lights must have surge at fixture, pole, and breaker.
- Surge is the number 1 cause of LED light failure. Indoor lights must have surge at fixture and breaker.

## PRODUCT TROUBLESHOOTING

| Issue | Check points |
|---|---|
| Light Flickers | Check all wiring for disconnections, shorts and burnt wiring and connections. Confirm steady input voltage to the light fixture, fluctuating input voltage will harm the LED driver and can lead to premature failure. Lights with photocells can have photocell tag from ambient light or light reflecting at the sensor. Simply cover the photocell completely and see if flickering continues while the photocell is covered. Call Tech Support for help if none of the above solves the issue. |
| Light does not work at all. | Check all wiring for disconnections, shorts and burnt wiring and connections. Confirm steady input voltage to the light fixture, fluctuating input voltage will harm the LED driver and can lead to premature failure. If input voltage is not in the voltage range of the fixture, you will need to find the source of your input voltage issue. Call Tech Support for help if none of the above solves the issue. |

LEGENDARY USA SUPPORT

**For more technical information, install questions, troubleshooting help or warranty claims, wehave a dedicated US Tech and Customer Support Team to help solve any issues you have andcan be reached by email or phone. If you need help with any of our products, we are here for you so that you are never in the dark!**

